PAGE NO	PAGE TITLE
01	TITLE PAGE
02	CAPSENSE SLIDERS AND LED
03	REVISION HISTORY

Legal Disclaimer :
The information given in this document shall in no event be regarded as a guarantee of conditions or characteristics. With respect to any examples or hints given herein, any typical values stated herein and/or any information regarding the application of the device, Infineon Technologies hereby disclaims any and all warranties and liabilities of any kind, including without limitation, warranties of non-infringement of intellectual property rights of any third party.

SCH Title : ***RDK DOCK - CAPSENSE SLIDER ADDON CARD***

Page Title: ***TITLE PAGE***

Size	Document Number	Drawn By	Approved By	Rev
A4	*MEMO: TBR*	*MANOHARAN*	*RAJV*	*01*

Date: *Monday, October 16, 2023* Sheet *1* of *3*

CAPSENSE SLIDER

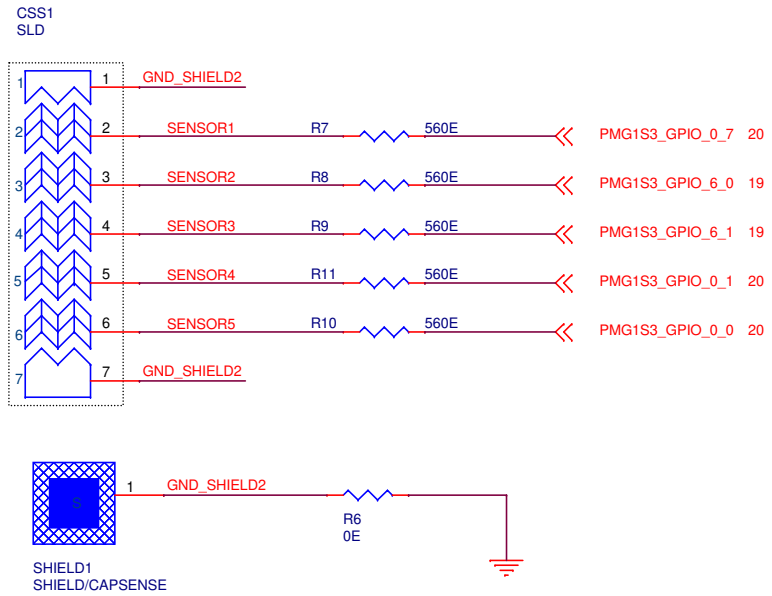

CAPSENSE CONNECTOR

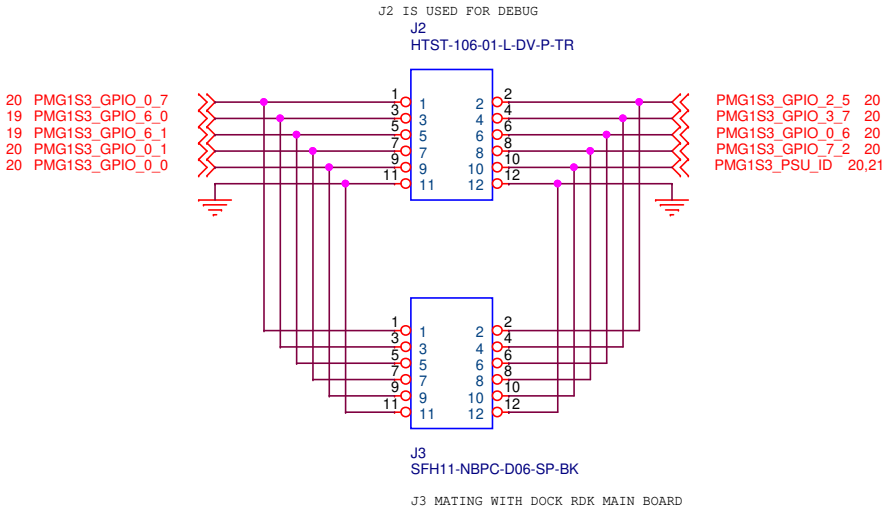

LED

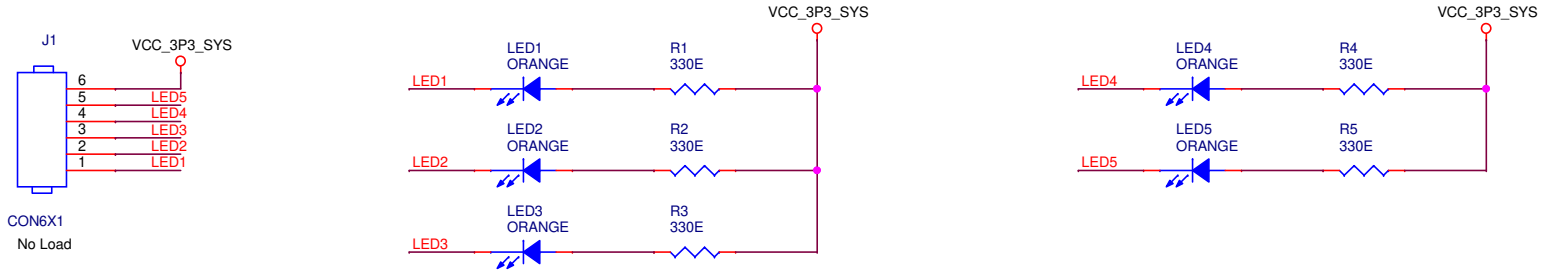

ACCESSORIES

ACC1 SCREW	ACC2 SCREW
ACC3 STAND OFF	ACC4 STAND OFF

Legal Disclaimer :
The information given in this document shall in no event be regarded as a guarantee of conditions or characteristics. With respect to any examples or hints given herein, any typical values stated herein and/or any information regarding the application of the device, Infineon Technologies hereby disclaims any and all warranties and liabilities of any kind, including without limitation, warranties of non-infringement of intellectual property rights of any third party.

SCH Title : *RDK DOCK - CAPSENSE SLIDER ADDON CARD*				
Page Title: *CAPSENSE SLIDERS AND LED*				
Size *A4*	Document Number *MEMO: TBR*	Drawn By *MANOHARAN*	Approved By *RAJV*	Rev *01*
Date: *Monday, October 16, 2023*		Sheet *2* of *3*		

REVISION HISTORY

REVISION NO	DESCRIPTION OF CHANGE'	RELEASE DATE	RELEASE NOTES
REV 01	INITIAL RELEASE	04JAN2023	

Legal Disclaimer :
The information given in this document shall in no event be regarded as a guarantee of conditions or characteristics. With respect to any examples or hints given herein, any typical values stated herein and/or any information regarding the application of the device, Infineon Technologies hereby disclaims any and all warranties and liabilities of any kind, including without limitation, warranties of non-infringement of intellectual property rights of any third party.